Acme Sanitary Ware Co. Ltd.
1/F, Acme Building, 22-28 Nanking Street, Kowloon, Hong Kong
Tel: 2388 7171 Fax: 2710 8012
Email: acme@acmesanitary.com.hk
Website: www.acmesanitary.com.hk
Since 1949

RENE

PROJECT		REF		REV	ITEM CODE	
LOCATION		DATE			PAGE	

SANITARY WARE SPECIFICATION SHEET

Item Descriptions	RENE (PRC) IR Sensor flush valve with manual button for watercloset, in 220V AC supply
Dimensions	L150 x H150 mm (Plate)
Model	C501DAA(F)
Finish	Satin
Material	Stainless Steel
Manufacturer	RENE (PRC)
Source	Acme Sanitary Ware Co. Ltd Mr. Eric Wong/ Mr. Wilson Hung
Contact Tel/Fax	(852) 2388-7171 / (852) 2710-8012
E-mail	acme@acmesanitary.com.hk
Website	www.acmesanitary.com.hk

Illustration/ Drawing



Concealed Wall Installation

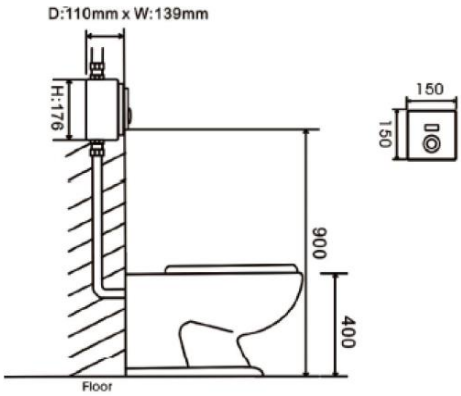

Concealed Duct Installation

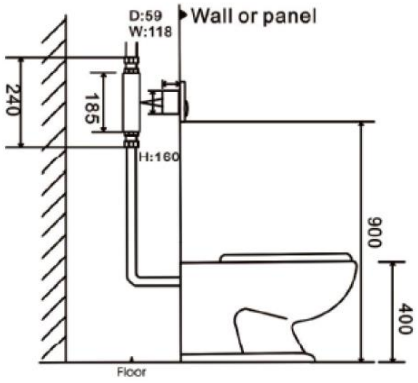

* Concealed/wall/duct type installation: Stainless steel casing and cover plate.
* Fully automatic with IR sensor + manual button.
* Build-in stop valve allows water to be adjusted and turned off as desired.
* Separated build-in strainer for easy clean up and maintenance.
* Adjustable flushing time and sensing distance.
* Full Flush function by sensor or manual button.
* Plastic valve for sea water operation.
* Auto flushing after 3 seconds when the user moves away.

Model:	C501DAA(F) (AC operated)
Water Inlet Diameter:	1" inlet and 1¼ " outlet
Water pressure range:	0.05 ~ 1Mpa
Power Supply Voltage	AC 220V
Electricity Consumption:	Stand by ≤ 0.05mW; Action ≤ 5W (15ms)
Environment Temperature:	1 ~ 55 °C
Flushing Volume:	Full flush : 4.5L – 7.5L or above , adjustable

Note:

** All information of the above is for the reference only. No prior notice is made if any changes.*

水務署
Water Supplies Department

總部 Headquarters
香港灣仔告士打道七號入境事務大樓 48 樓
48/F, Wan Chai Tower, 7 Gloucester Road, Wan Chai, Hong Kong

ACME SANITARY WARE CO., LTD. 2388 1717

本署檔號 Our ref. : [illegible] 23 T/J(924/2023)
來函檔號 Your ref. :
電話 Tel. :
傳真 Fax. : 2824 0578

27 October 2023



Approval of "RENÉ" Sensor Flush Valve
(General Acceptance No. C20230797F)

Your E-Application [file-id: ETJ-GA-20230912-118] dated 12 September 2023 and subsequent submission received by this department on 29 September 2023 refer.

Having considered the test report ref. RDCA060 issued on 6 September 2023 by Ideal Test Consultants Ltd., this Authority accepts that the fitting described below complies with, and its use when correctly installed does not contravene, the Waterworks Ordinance and Regulations.

Name of Manufacturer:	Dreyer
Country of Origin:	the Mainland of China
Brand:	RENÉ
Details of Fitting:	1¼" Sensor flush valve for WC
Model:	C501XXX (where "XXX" denote the various installation methods)
Body Markings:	RENÉ

香港環境卓越大獎
10 years+ 同心展望 caringorganisation

Expiry Date: 3 September 2028

Proviso: As the fitting has not been tested for use in contact with water intended for human consumption, the fitting can only be used in flushing water plumbing systems.

This Authority hereby permits the use of the above fitting in flushing water plumbing systems subject to full adherence to Waterworks installation requirements. In particular, you are required to draw your customers' attention to the following requirement-

"Installation of filter before flushing valve is required. Without the filter, the flushing valve is liable to leak. The installed filter need frequent inspection and cleaning to maintain flushing supply. Normally only public toilets with good management system for maintenance would be considered."

"A stop cock or gate valve must be installed at the upstream of the fitting for manual isolation of water supply."

"The design flushing volume of the flushing valve should be compatible with the toilet bowl to ensure that effective clearance can be achieved by a single flush of water."

"Flushing valve should be used within the range of working pressures specified by the manufacturer." AND

"Installation of electronic opening and closing sanitary tapware should also comply with the requirements of Electrical & Mechanical Services Department."

A condition of this acceptance is that the fitting to be installed shall be replicas of the sample as certified by the testing agent mentioned above and without modifications. This acceptance may be withdrawn at any time if the standard of the fitting installed fails to meet that of the approved sample or if the fitting is found to be unsuitable for use in flushing water plumbing systems.

For the use of the fitting in any project, the General Acceptance Number of this letter must be quoted as a means of identification of acceptance of the fitting by this Authority.

Should you have any enquiries, please contact our Engineer Ms Winnie LO at tel. no. 3583 4086.

Yours faithfully,

(Terry KUNG)
for Director of Water Supplies

Encl.

c.c. WSD 3321/1/82] - without catalogue
ME/MC] - with soft copy only